duelco
SAFETY solutions

Emergency STOP relay

NST-2004

- Status-/fault indication via LEDs
- 3 NO safety outputs
- 1 transistor output or 1 NC contact
- Short circuit monitoring
- Suitable for light curtain applications

What can Duelco emergency stop relay NST-2004 offer you?

- Simplicity - Fast and easy installation via user friendly connection examples.
- Cat. 4 safety level with 3 NO duplicated output contacts.
- Status-/fault indication. LEDs for indication of the status of the internal relays, the outputs and the supply. The LED signalling can reduce trouble shooting time.
- 8-36VDC version suitable for trucks, loaders, cranes and various construction machines.

Technical facilities regarding safety requirements:

- Forced contacts
- Doubling of output contacts
- Internal / external redundancy (for two-pole E-stop)
- Manual, automatic or manual monitored reset (DIP-switch selection)

User's advantages:

- Performace level e acc. to EN ISO 13849-1, cat. 4
- STOP category 0
- 3 NO contacts, AC1: 230 V AC / 6A ; DC1: 24V / 6A
- 2-channel operation with short circuit protection
- 1-channel operation
- Voltage versions: 24VDC, 230VAC and 8-36VDC
- No requirements concerning simultaneity between CH1 and CH2
- 22,5 mm slimline housing
- LED indication of supply + output status of K1, K2
- Complies with MD, EMC, LVD (98/37/EC, 89/336/EEC & 93/68/EEC)

c UL us LISTED

TÜV Baumuster geprüft

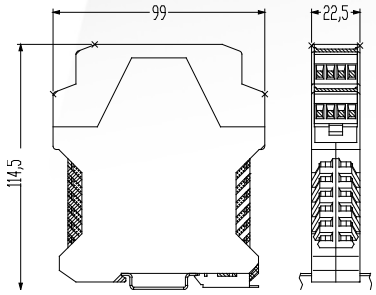

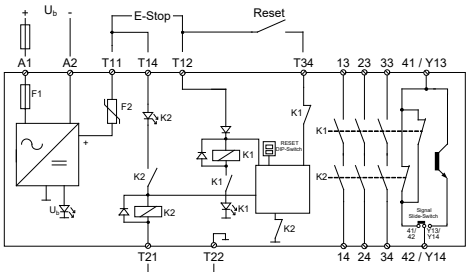

Operation description

The power supply is connected to the terminals A1(+) and A2(-), the LED Ub illuminates. When not activated, the relay's NO contacts 13-14, 23-24 and 33-34 are open and the NC contact 41-42 / transistor output Y13-Y14 is closed / non conductive. If the emergency stop is deactivated, and the monitoring circuit detects that the relay function is correct, the relay can be started by activating a reset contact between the terminals T12 and T34 (automatic, manual or manual monitored reset). This switches on the NO contacts 13-14, 23-24, 33-34, the NC signal contact 41-42 opens or the transistor output Y13-Y14 is conductive. The LEDs K1 and K2 illuminates.

If the emergency stop button is activated, the relays K1 and K2 will deactivate. The NO safety contacts 13-14, 23-24, 33-34 opens and the NC signalling contact 41-42 closes / Y13-Y14 is non-conductive.

A short circuit between the two emergency stop contacts will deactivate the NST-2004 via the internal PTC-fuse (i.e. the emergency stop relay can be reset again when the short circuit/error is removed!).

Status table

LED Ub	LED K1	LED K2	Interpretation / Possible Fault (depends on which connection example is being used)
OFF	OFF	OFF	Supply not connected or missing / bad connection
ON	ON	ON	Relay K1 and K2 activated / emergency stop OK
ON	OFF	OFF	Relay K1 and K2 are deactivated; error between the two emergency stop inputs
ON	ON	OFF	K1 activated and K2 deactivated; error in emergency stop at T14; T21; T22, K1 may be welded / defect
ON	OFF	ON	K1 deactivated and K2 activated; error in emergency stop at T11,T12, K2 may be welded / defect

Technical data NST-2004

Electrical data	
Supply voltage (NB! Common Power Supply)	A: 24V AC/DC, B: 8-36V DC C: 230V AC
Voltage range	0,90 ...1,1 U_B
Frequency (AC-type)	50 ... 60 Hz
Power consumption	DC: ~ 1,2 VA, AC: ~ 3,5 VA
Conductor data	
Max. cross section of conductor, Solid thread: Multiwire with ferrule:	 1 x 2,5 mm² 1 x 2,5 mm²
Cable type	60/75 or 75°C copper (CU)
Max. overall cable resistance, input terminals	A & B: ~ 60 Ω / C: ~ 100 Ω
Capacity	150 nF/km
Contact data	
Contact-allocation	3 NO / 1 NC
Contact type	Positive guided relay
Contact material	$AgSnO_2$ 0,5µ Au
Switching voltage	250V AC, 24V DC
Switching current	6 A
Max. switching capability DIN EN 60947-5-1	AC 15 230V / 5 A; DC 13 24V / 5 A
Max. switching capacity	1380 VA (ohms load)
Mechanical lifetime	>10 millions
Creeping distance and clearance DIN VDE 0160	Pollution grade 2: Over voltage category 3 / 250 V Basis isolation: Over voltage category 3 / 250 V
Reactivation time by emergency stop	0,5 s
Cut-out time by emergency stop, K1	< 30 ms.
Mechanical data + various	
Housing material	Polyamid PA 6.6
Dimensions (WxHxD)	22,5 x 114,5 x 99 mm
Mounting	Click-fastening for DIN-Rail
Max tightening torque	<1 Nm
Weight AC/DC	~ 250 g / ~ 200 g
Storage temperature	-30 - +70° C
Operating temperature	-25 - +60° C
Enclosure rating, Terminals, Housing	IP 20 (DIN VDE 0470); IP 40 (DIN VDE 0470)
Certification	
Tested in acc. with PL / Category	EN ISO 13849-1 e / 4

Connection examples:

2-channel operation with short circuit protection

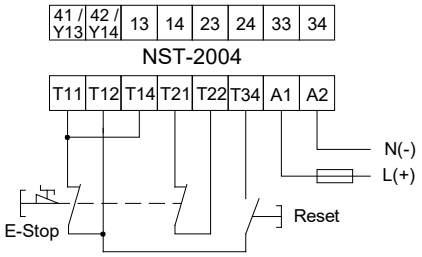

2-channel operation with light curtain

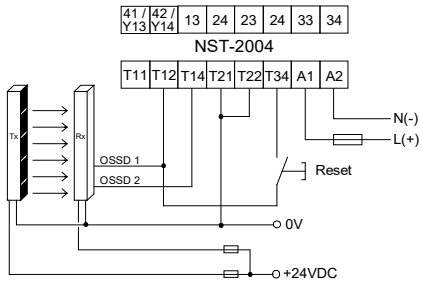

2-channel protection door monitoring without short circuit protection

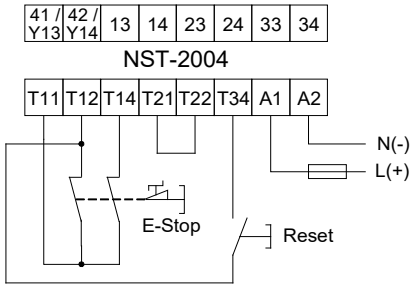

Connection of external relays

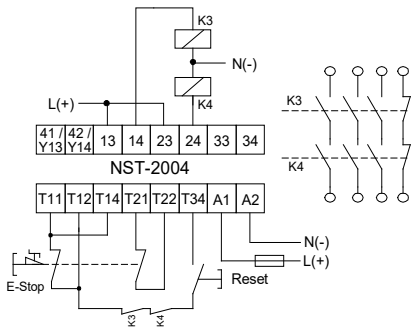

Order information:

Description	Article no.
NST-2004F 24V DC	42010204
NST-2004D 24V DC	42011204
NST-2004F 8-36V DC	42010205
NST-2004F 230V AC	42012301

Duelco A/S - Aalborg
Systemvej 8
DK-9200 Aalborg SV

Duelco A/S - Sønderborg
Mommarkvej 5
DK-6400 Sønderborg

Tel. +45 7010 1007
Fax: +45 7010 1008
www.duelco-safety.com
info@duelco.dk